NOTE:
MANUFACTURE OF PRECAST WILL NOT COMMENCE UNTIL DRAWINGS ARE SIGNED AND RETURNED APPROVED.

APPROVED ..... DATE .....

DATE REQUIRED ON SITE .....

SL01 – 1 OF

1:20

VOL= 0.276m^3
WT= 0.718 t

LIFTING DESIGN TBC

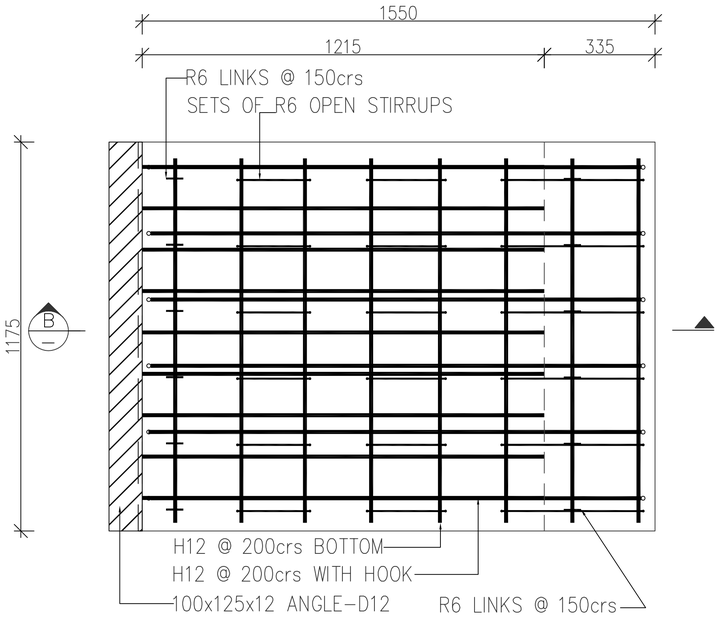

PLAN AS CAST
SCALE 1:20

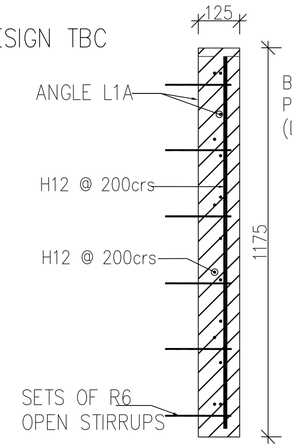

SECTION A
SCALE 1:20

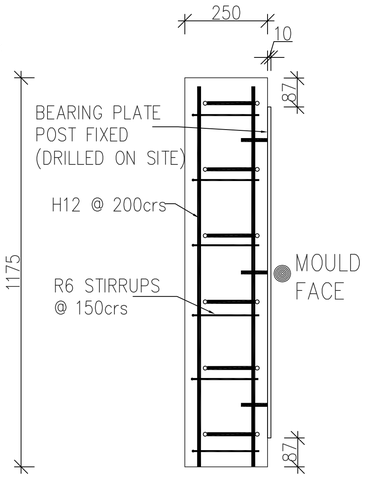

SECTION C
SCALE 1:20

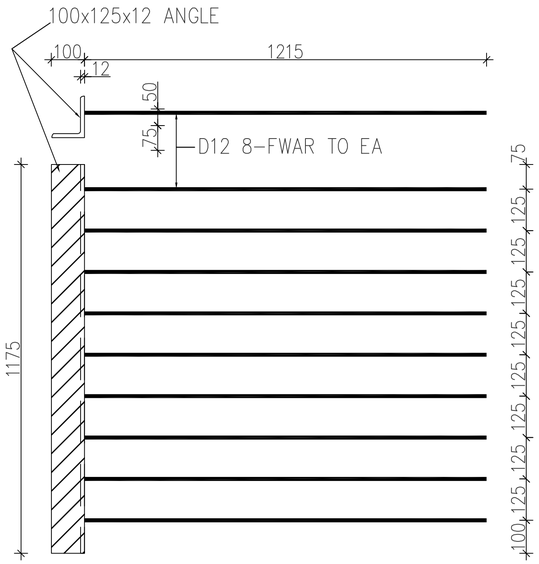

ANGLE L1A

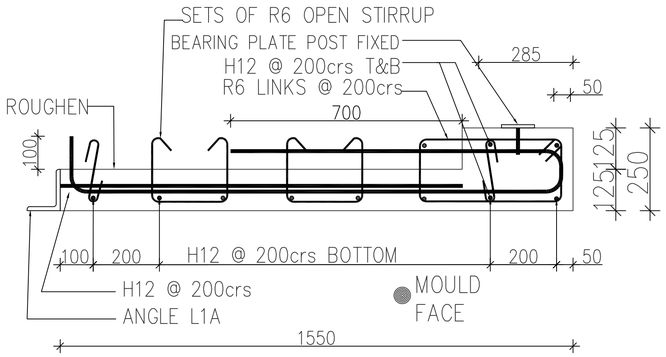

SECTION B
1:20

Rev	Description	Date	By	Chkd
A	FOR APPROVAL	26.01.17	MS	RVB

Scales AS SHOWN
Drawn MS
Date 10 JANUARY 2017
Checked By RVB
Job No. APBB
SL01 Dwg No.
A Rev.