BFP263 – 1 OF

1:20

COG, EDGE LIFTERS
AND FACE LIFTERS
TBC BY ANCON

| | |
|---|---|
| VOL= | 0.276m³ |
| WT= | 0.70 t |

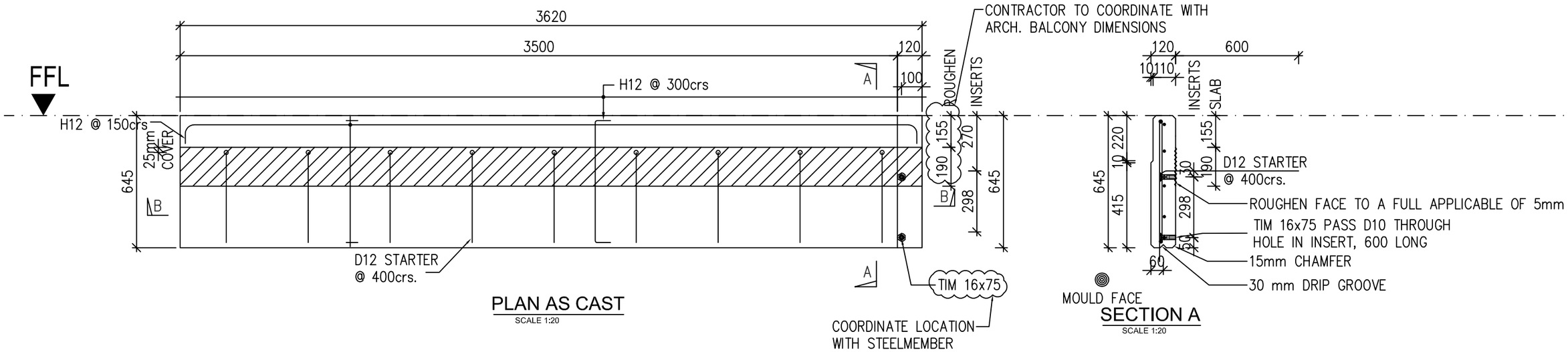


PLAN AS CAST
SCALE 1:20

SECTION A
SCALE 1:20

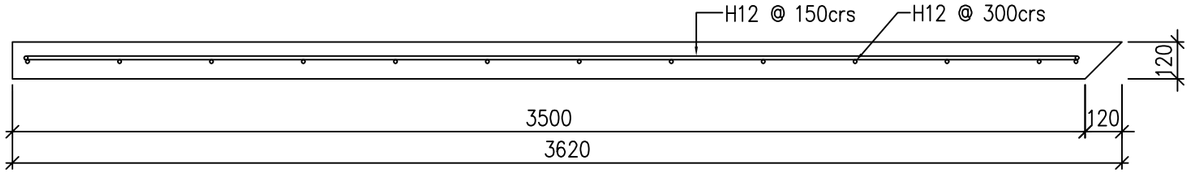


MOULD FACE

SECTION B
SCALE 1:20

THIS DRAWING IS FOR PRECAST SETOUT PURPOSES ONLY. REFER TO ARCHITECTS AND ENGINEERS DRAWINGS FOR BUILDING DIMENSIONS.

NOTES:

1. CONCRETE STRENGTH TO BE 40 MPa
   STRENGTH AT LIFTING TO BE 25 MPa
2. CONCRETE COVER TO BE 50mm U.N.O. (35 I
3. REFER TO NZ 3109:1997 TABLE 5.1
   FOR PRECAST TOLERANCES
4. TOP FACE FINISH TO BE F5 U.N.O.
   MOULD FACE FINISH TO BE F5 U.N.O.

THI

| Rev | Description | Date | By | Chkd |
|---|---|---|---|---|
| A | FOR APPROVAL | 19.09.16 | MR | NB |

Scales AS SHOWN
Drawn MR
Date SEPT 19 2016
Checked By NB
Job No. APB
BFP263 Dwg No.
A Rev.