DRG NO : [R.19]

SHOP MATERIAL LIST FOR 1 ASSEMBLY			
MARK	SIZE	LENGTH MM	Total Qty.
R19- p30	PLT16*250	550	2
pl2	PL10*250	3696	2
pl218	PLT6*60	90	2
pl221	PLT10*200	230	1
pl228	PLT10*100	230	2
pl266	PL10*250	3645	2
pl285	PLT10*696	7355	1
ST1	PLT10*75	100	8

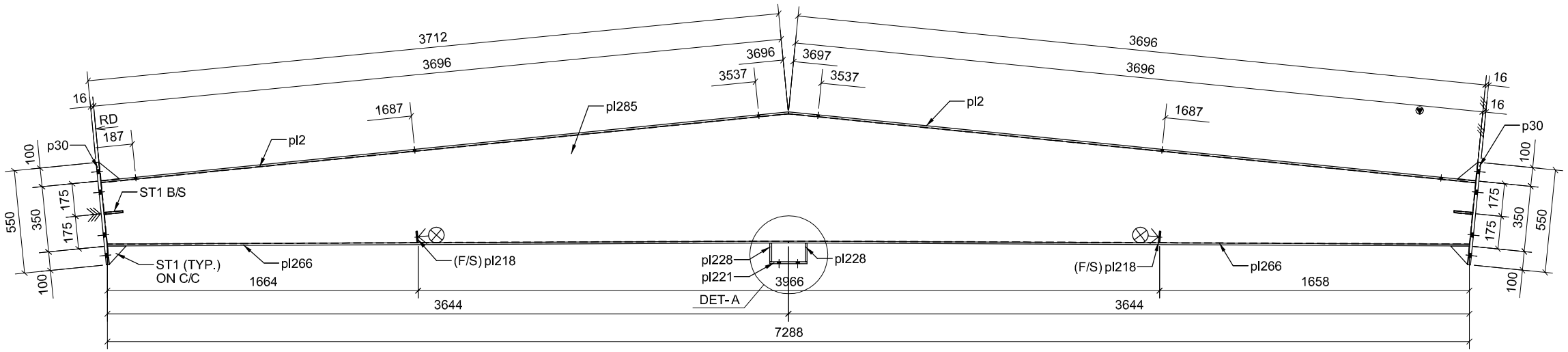

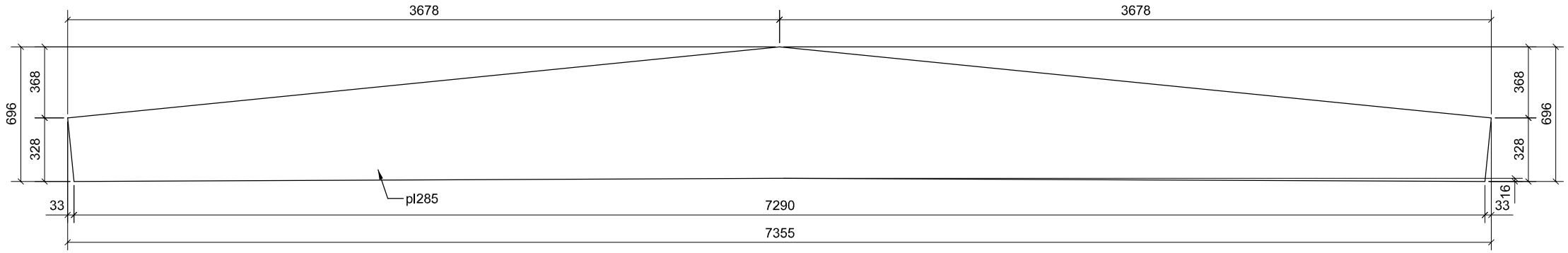

(10*696) X 7355 (pl285)

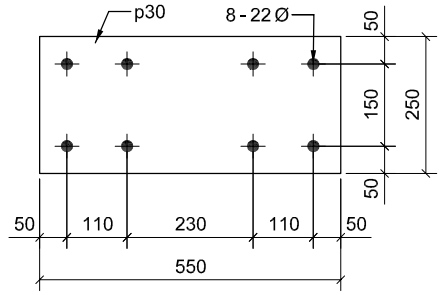

PLT16*250* 550 X p30

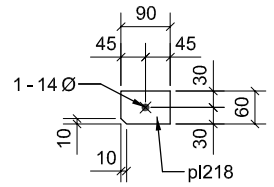

PLT6*60* 90 X pl218

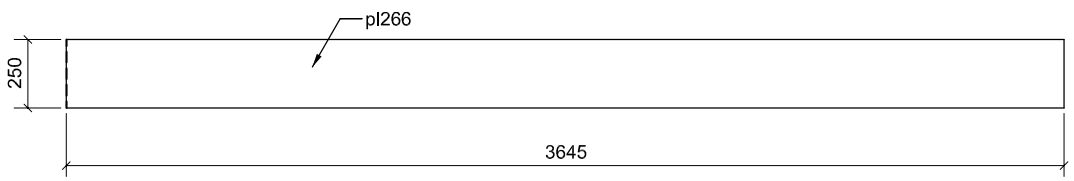

PL10*250* 3645 X pl266

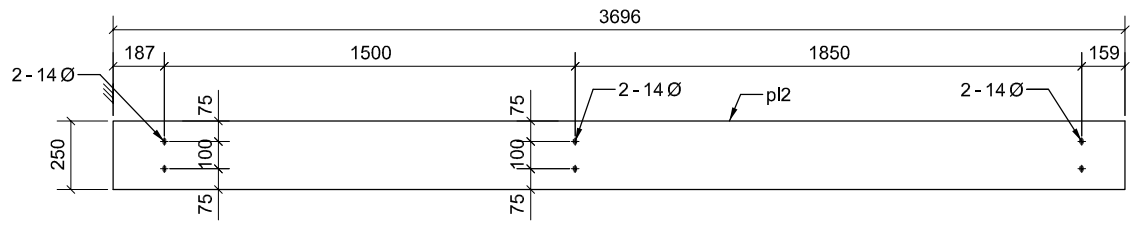

PL10*250* 3696 X pl2

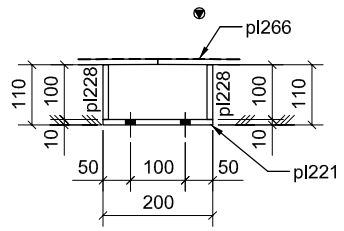

DETAIL -A
1:10

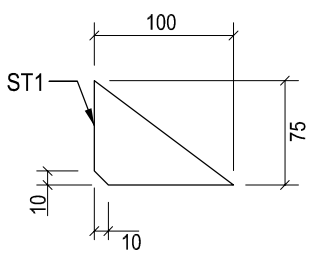

TYP. CONNECTION PLATE
STIFFENER (ST1)

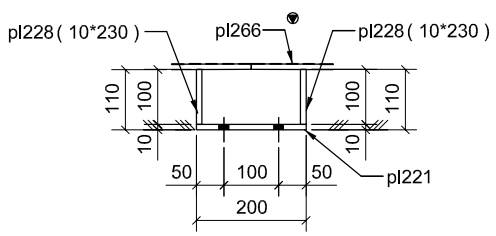

DETAIL -A
1:10

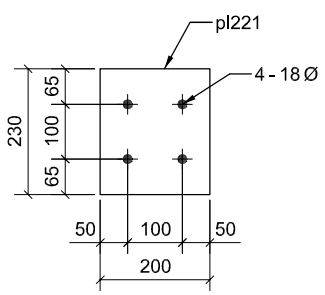

PLT10*200* 230 X pl221

MATERIAL : -
QTY :- 1

NOTES:
UNLESS OTHERWISE SPECIFIED ALL DIMENSIONS ARE IN MM.
TOLERANCE FOR ALL ATTACHED COMPONENTS & C/D SHALL BE K 1mm.
TOLERANCE OVERALL LENGTH OF COLUMN & RAFTER K 2mm.

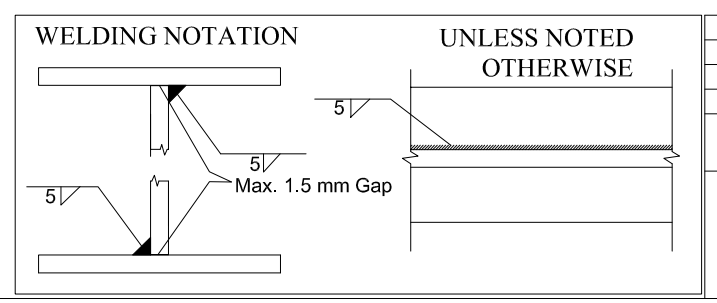

2011	DATE	NAME			
DRAWN					
CHKD			A		
APPD			REV	MODIFICATIONS TECHNIQUES CONSTRUCT / MFR. TECHNICAL MODIFICATIONS	DATE

SCALE :

ITEM CODE :

TITLE : NAVSAN GLASS LTD. RAFTER

DRG NO : [R.19]- (GRID-17) REV. A

REF. DRG NO : SHEET : 1 / 1

UNLESS SPECIFIED GENERAL TOLERANCE: IS - 1852 / 7215